Drawing No. - KONE - P-2/P-3 - 023-R1

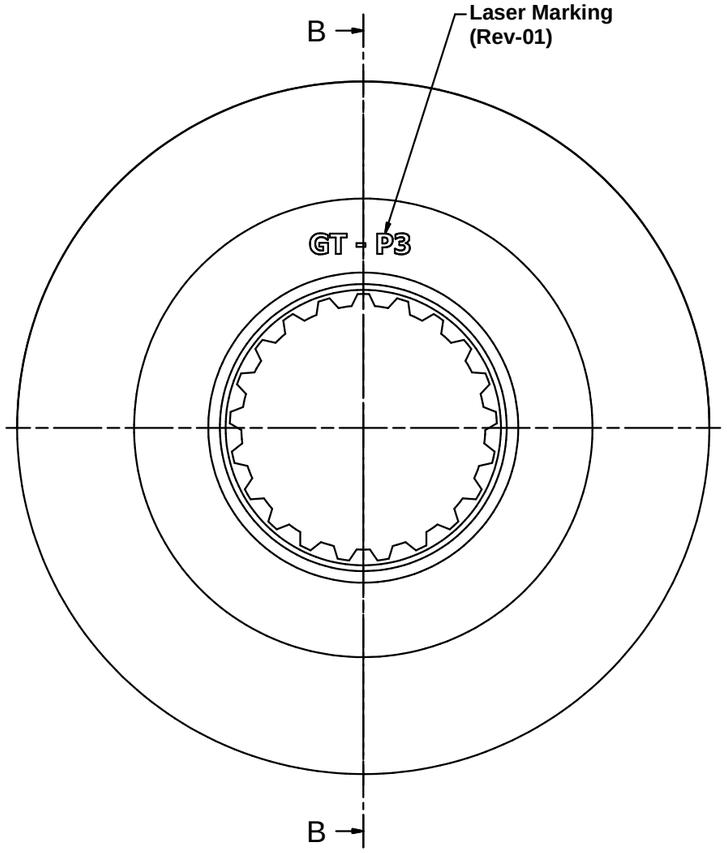

B-B (2 : 1.5)

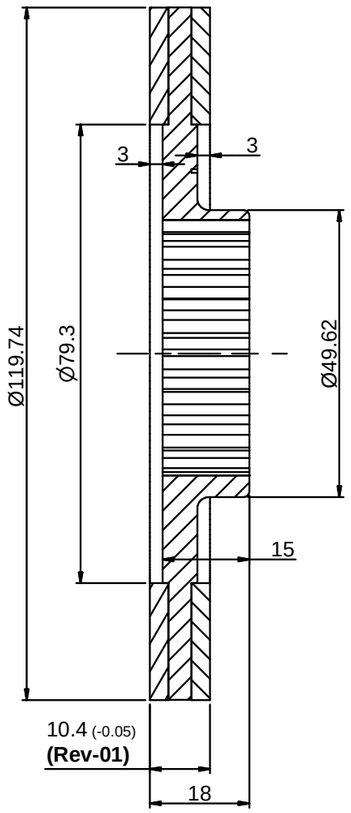

EMCO Rotor

Rotor Size - P-2 / P-3
No. of teeth - 21

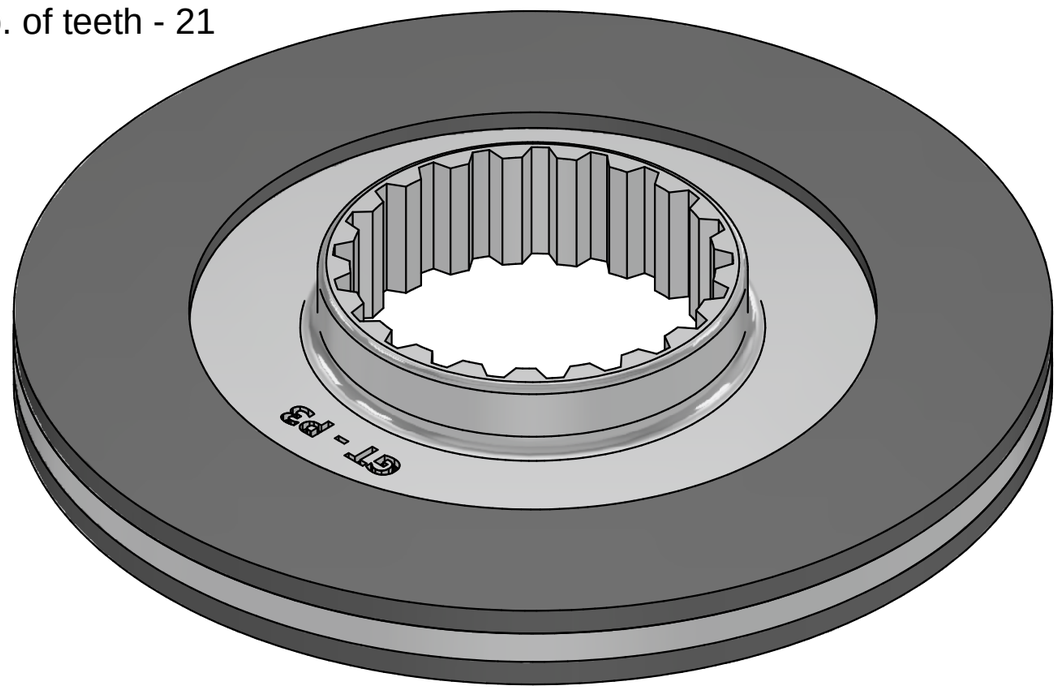

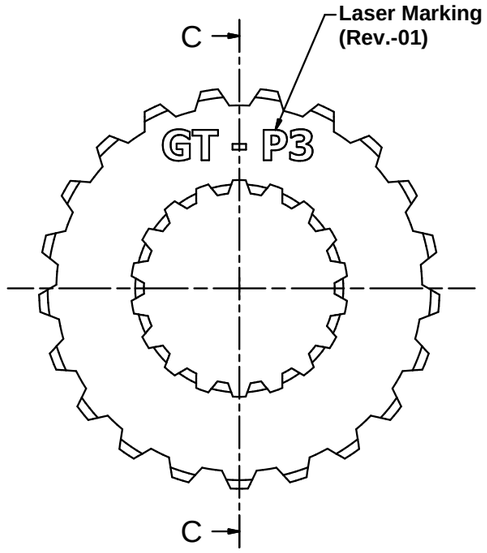

C-C (2 : 1)

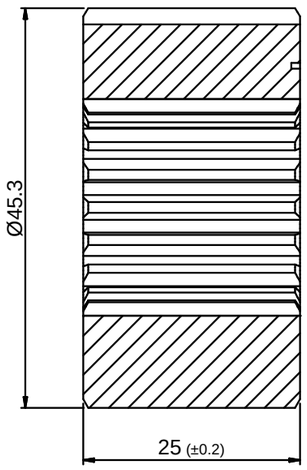

Kone Hub

Hub Size - P-2 / P-3
No. of teeth - 21 Outside &
No. of teeth - 18 Inside

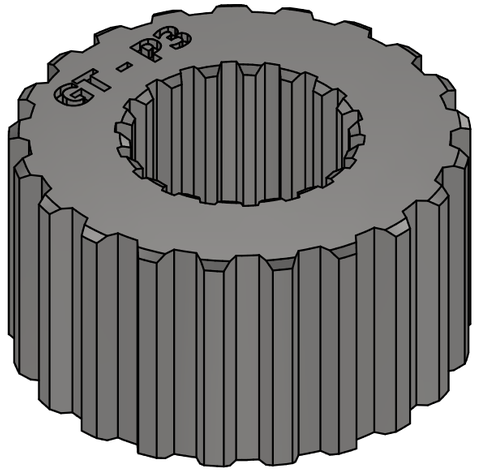

All dimension are in mm.

REVISION HISTORY			
REV	DESCRIPTION	DATE	APPROVED
00		29-Nov-17	V.R.Sharma
01	1) - Rotor Thicknesh - 10 mm change to 10.4 (-0.05) 2) - Laser Marking details added	01-Nov-19	V.R.Sharma

FILE NAME	FSCM NO	SHEET 00	SCALE N.T.S.
SIZE		EMCO Dynatorq Pvt. Ltd.	
DRAWN 29-11-2017 Himanshu Gajjar			
CHECK 29-11-2017 V.R.Sharma		Rotor Complete	
APPR. 29-11-2017 V.R.Sharma			
ISSUED 29-11-2017 Himanshu Gajjar			
REV R1		DWG NO Kone-P-2/P-3-023-R1	
CONTRACT NO			

Drawing No - KONE-P4-P5-023

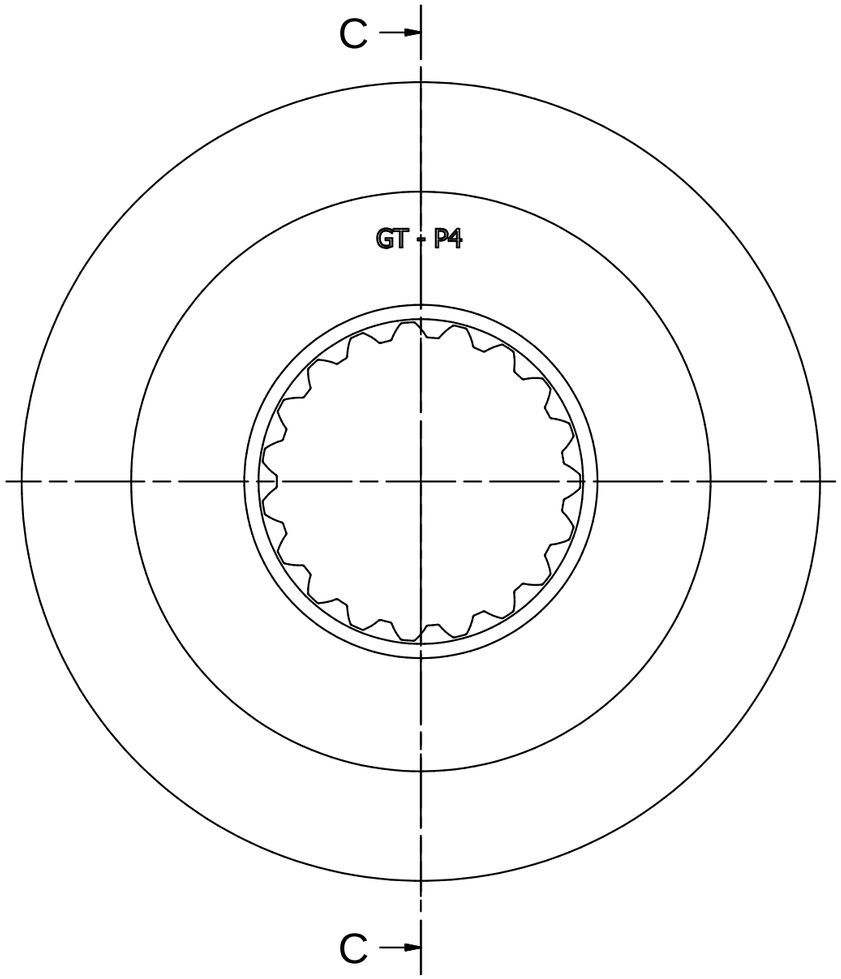

C-C (1 : 1)

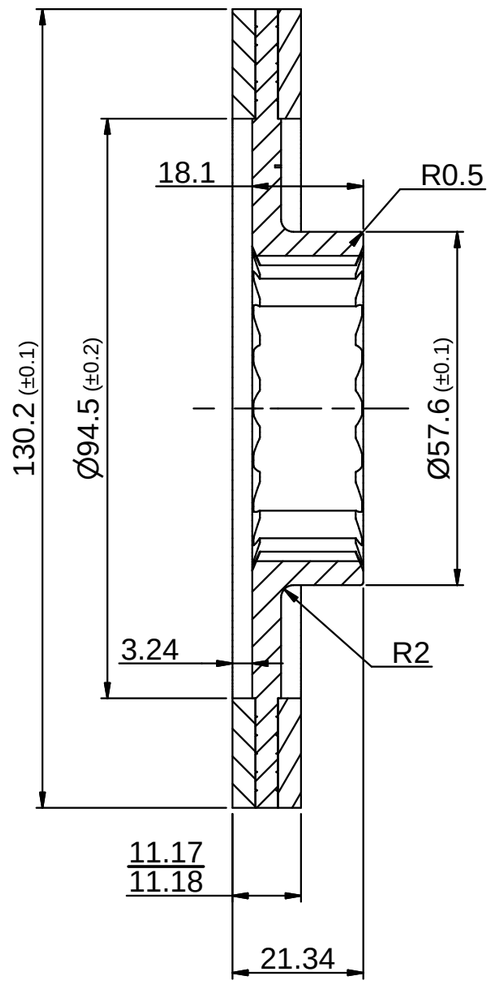

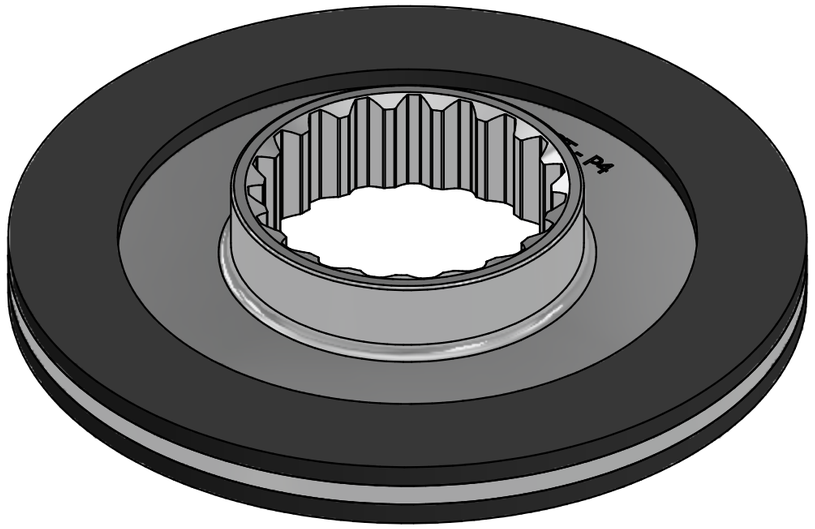

Gear Detail

- ► **Reference diameter - dB ---- 52**
- ► **Module - m ---------- 2.5**
- ► **Pressure angle - a ---------- 30°**
- ► **No. of Teeth - z ---------- 19**
- ► **Profile ---------- DIN 5480**

All Dimension are in mm.

REVISION HISTORY			
REV	DESCRIPTION	DATE	APPROVED
00		11-04-2019	V.R.Sharma

FILE NAME		FSCM NO	
SIZE	KONE - P4-P5		
DRAWN	11-04-2019 Himanshu Gajjar		
CHECK	11-04-2019 V.R.Sharma		
APPR.	11-04-2019 V.R.Sharma		
ISSUED	11-04-2019 Himanshu Gajjar		
REV	00		
CONTRACT NO			

SHEET A3	SCALE 1 : 1
EMCO Dynatorq Pvt. Ltd.	
Rotor Complete	
DWG NO KONE-P4-P5-023	

Drawing No - KONE-P4-P5-027

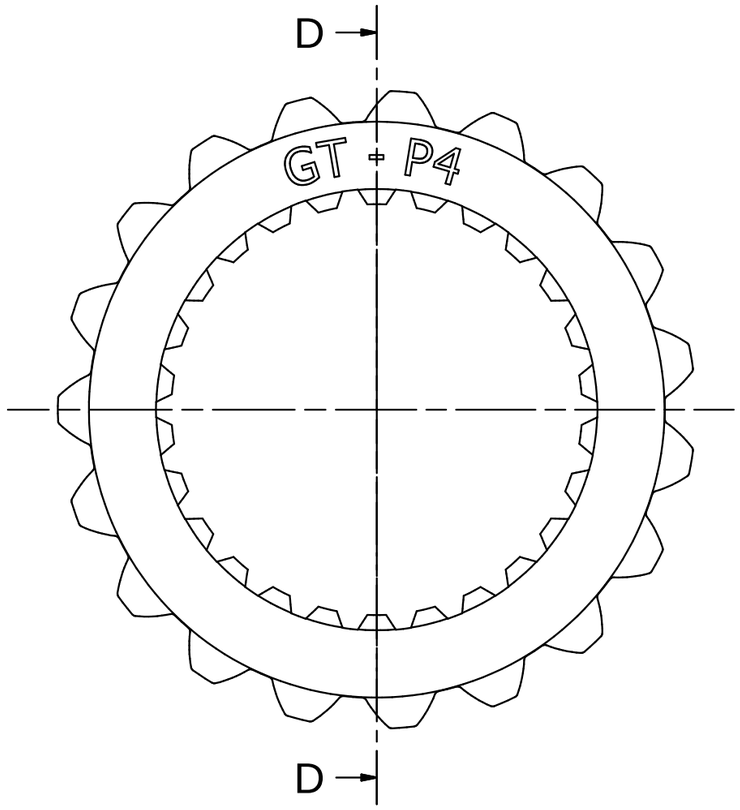

D-D (2 : 1)

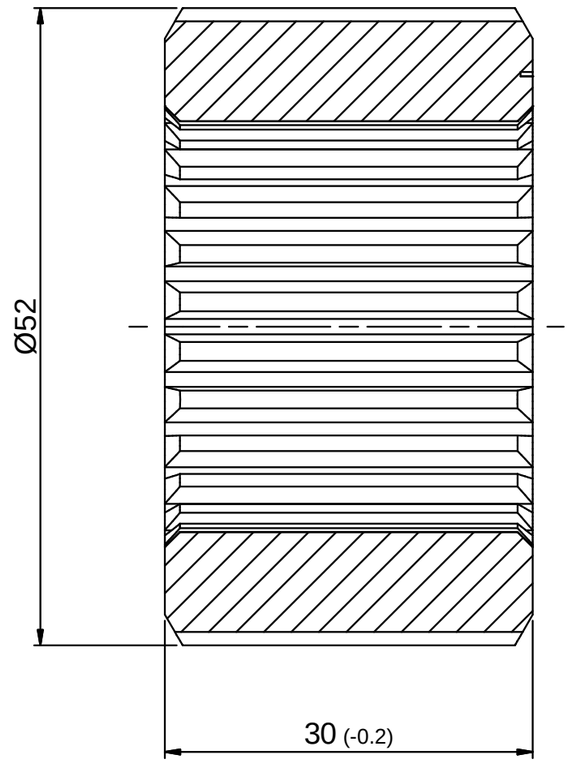

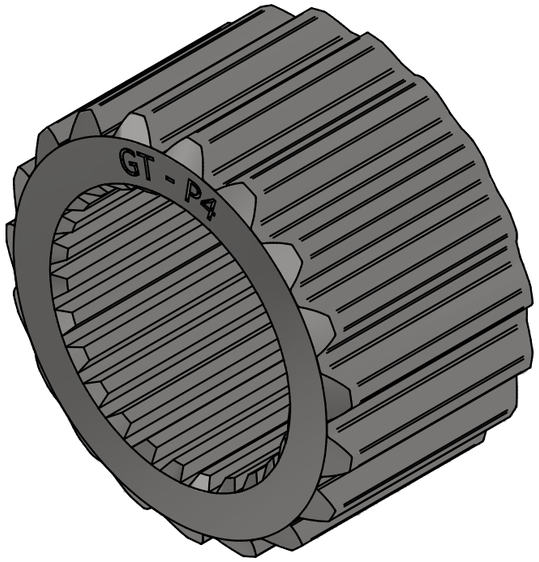

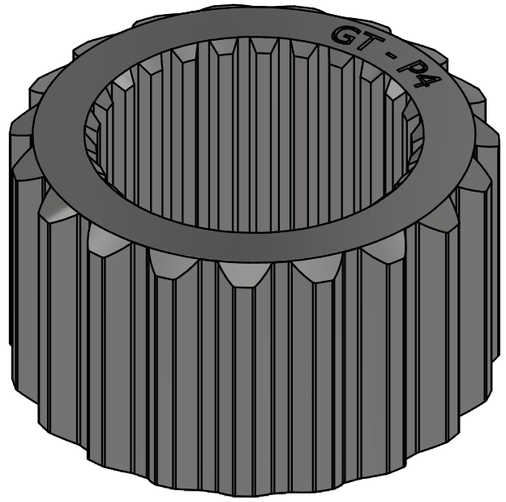

All Dimension are in mm.

Inside Gear Detail (Broaching side)

- ► **Reference diameter - dB ---- 35**
- ► **Module - m ---------- 1.25**
- ► **Pressure angle - a ---------- 30°**
- ► **No. of Teeth - z ---------- 26**
- ► **Profile ---------- DIN 5480**

Outside Gear Detail

- ► Reference diameter - **dB** ---- 52
- ► Module - **m** ---------- 2.5
- ► Pressure angle - **a** ---------- 30°
- ► No. of Teeth - **z** ---------- 19
- ► Profile ---------- DIN 5480

REVISION HISTORY

REV	DESCRIPTION	DATE	APPROVED
00		11-04-2019	V.R.Sharma

FILE NAME	FSCM NO	SHEET A3	SCALE 1 : 1
SIZE KONE - P4-P5		EMCO Dynatorq Pvt. Ltd.	
DRAWN 11-04-2019 Himanshu Gajjar		HUb	
CHECK 11-04-2019 V.R.Sharma			
APPR. 11-04-2019 V.R.Sharma			
ISSUED 11-04-2019 Himanshu Gajjar			
REV 00		DWG NO KONE-P4-P5-027	
CONTRACT NO			